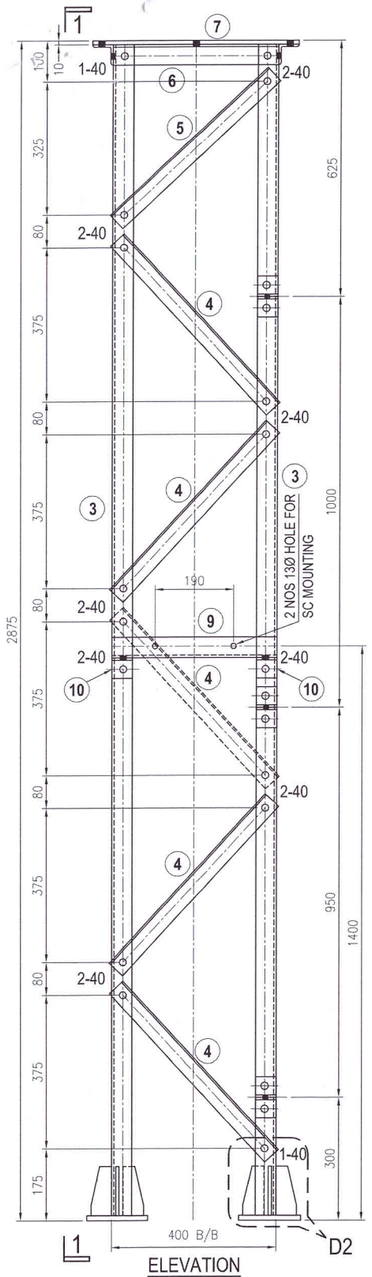

ELEVATION

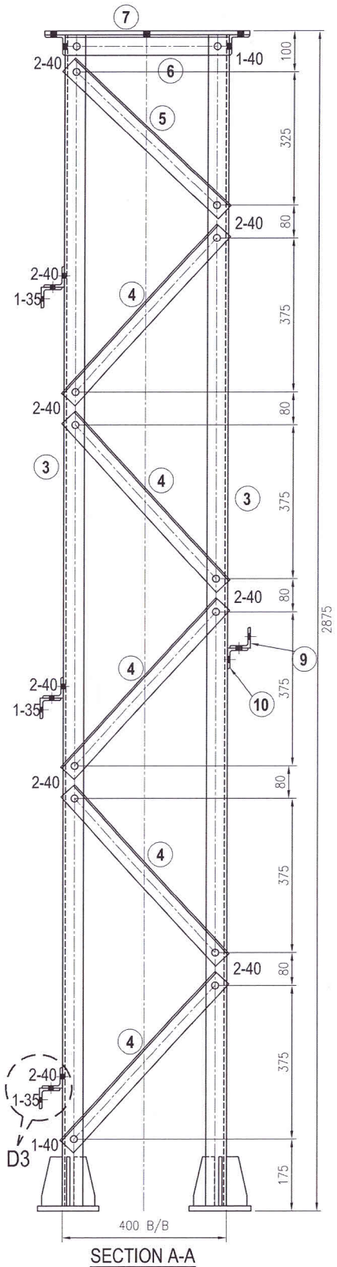

SECTION A-A

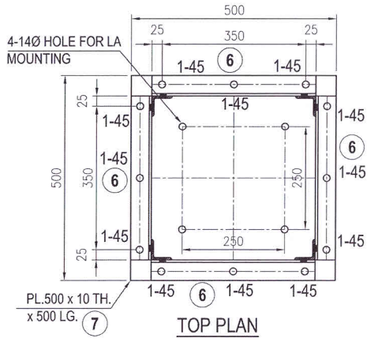

TOP PLAN

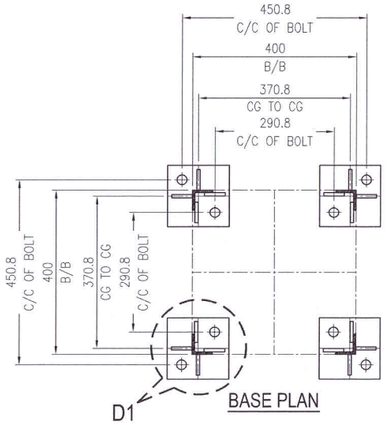

BASE PLAN

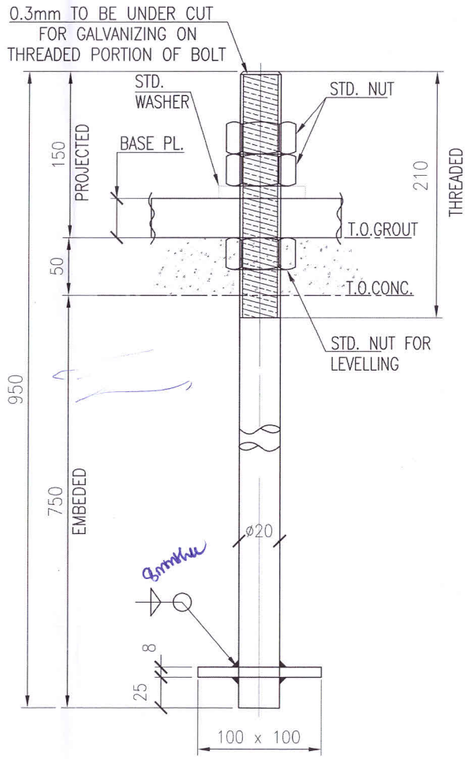

DET. OF 20Ø ANCHOR BOLT

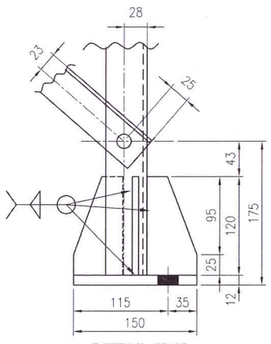

DETAIL "D2"

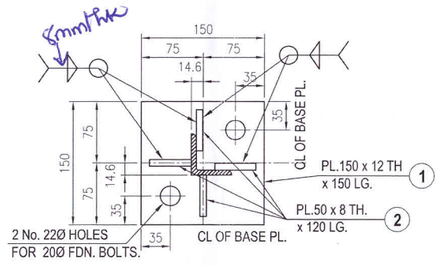

DETAIL "D1"

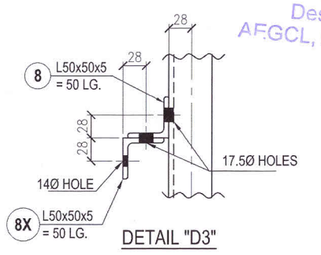

DETAIL "D3"

BILL OF MATERIAL

Mark No.	Section	Length	Unit Wt.	Wt/No. Kg.	Qty/Set Nos.	Weight/ Set(Kg)	Remarks.
1	PL 12Thk X 150	150	94.20	2.120	4	8.478	
2	PL 8Thk X 50	120	62.80	0.377	16	6.029	
3	L 50X50X6	2853	4.50	12.839	4	51.354	
4	L 45X45X4	559	2.70	1.509	20	30.186	
5	L 45X45X4	523	2.70	1.412	4	5.648	
6	L 50X50X6	400	4.50	1.800	4	7.200	
7	PL 10Thk X 500	500	78.50	19.625	1	19.625	
8	L 50X50X5	50	3.80	0.190	6	1.140	
8X	L 50X50X5	50	3.80	0.190	6	1.140	
9	L 50X50X5	400	3.80	1.520	1	1.520	
10	L 50X50X5	50	3.80	0.190	2	0.380	
TOTAL WEIGHT OF STRUCTURE						132.700	

SL. NO	BOLT MKD.	DESCRIPTION	UNIT WT (Kg/pc)	NOS	TOTAL WT (Kg)
1	1-35	M-12 x 35 Lg.	0.066	6	0.396
2	1-40	M-16 x 40 Lg.	0.125	72	9.000
3	1-45	M-16 x 45 Lg.	0.133	12	1.596
SPRING WASHER					
1	FOR M-12 - 2.5mmTH.		0.006	6	0.036
2	FOR M-16 - 3.5mmTH.		0.009	84	0.756
TENTATIVE WT.OF FASTNERS =					**11.784**

Asstt. General Manager (C)
Design & Project
AEGCL, Kahilipara, Ghy-19

APPROVED BY
General Manager (C)
To the MD, AEGCL, Bijulee Bhawan
Paltanbazar, Guwahati-1

Civil Expert
PT Feedback Infra
Indonesia

Asstt. Manager (C)
Design & Project
AEGCL, Kahilipara, Ghy-19

NOTES :-

1. ALL DIMENSIONS IN MM, LEVELS IN METER UNLESS NOTED OTHERWISE.
2. STRUCTURAL STEEL SHALL CONFORM TO IS:2062 & GRADE -E250A.
3. BOLTS / NUTS SHALL BE PROPERLY CLASS 5.6 & 5.0 RESPECTIVELY AS PER IS:12427, PACK WASHER TO IS:2016 & SPR. WASHER T0 IS:3063.
4. STRUCTURAL STEEL MEMBERS INCLUDING FOUNDATION BOLTS SHALL BE GALVANIZED WITH MINIMUM 0.610 kg/m2 WEIGHT OF ZINC.
5. ALL BOLTS / NUTS M-16 (HOLE 18Ø) IF NOT SPECIFIED.
6. FABRICATION SHALL CONFORM TO IS:802(PART-2).
7. ALL BOLTS, NUTS & WASHERS SHALL BE HOT DIPPED GALVANIZED AS PER RELEVANT IS CODE.
8. FOUNDATION BOLTS SHALL CONFORM TO IS:5624 AND PROPERTY CLASS SHALL BE 4.6 AS PER IS:1367 (PART-3).
9. WELDING SHALL BE CARRIED OUT IN ACCORDANCE WITH IS:816. WELD SIZE = 8MM
10. ALL MEMBERS LENGTH ,SLOPE DIMN. , SHAPES & SIZE OF GST. PLS, BOLT POSITION & NOTCH CUTTING SHOULD BE CHECKED BY FULL SCALE SHOP LAYOUT BEFORE FABRICATION.

REFERENCE DRAWING:

a) CG POWER AND INDUSTRIAL SOLUTIONS LIMITED
Drg No.- 002 / 326921---- GA FOR 216kV, CL-4 POLY. SURGE ARRESTER

REV	DESCRIPTION	PREP.	CHKD.	APPD.	DATE
0	FIRST SUBMISSION	N.K.D	D.S	S.C	10.11.2025

SIGN.

OWNER	ASSAM ELECTRICITY GRID CORPORATION LIMITED
EPC (THIS DRAWING IS THE PROPERTY OF M/S TECHNO ELECTRIC & ENGG. CO. LTD, AND NOT TO BE COPIED OR USED WITHOUT THEIR PRIOR PERMISSION)	TECHNO ELECTRIC & ENGINEERING COMPANY LIMITED
NOA :	AEGCL/MD/AIIB/400kv/Sonapur/Tender/PkgH/2023-24/Extn-2/71 Dtd: 13.09.2024
PROJECT :	CONSTRUCTION OF 400/220kV, GIS AT SONAPUR AND ASSOCIATED TRANSMISSION LINES AND BAY EXTENSION WORKS AT EXISTING 220kV SONAPUR GIS
SUBSTATION :	400/220kV GAS INSULATED SUBSTATION AT SONAPUR
DRG. TITLE	SONAPUR SS - 220kV LA (LOW LEVEL) - FABRICATION DRAWING & BILL OF MATERIAL OF SUPPORT STRUCTURE
DRG. NO. :	AEGCL-SONA-0816SN-CIV-2LASFAB-126
SCALE :	N.T.S — JOB NO: 0816SN — SHEET 1 OF 2